| Experiment No. 6 | |
|---|---|
| **Adder and Subtractor** | |
| **Course Code:** CPE 013 | **Program: BSCpE** |
| **Course Title:** Logic Circuits and Design | **Date Performed: 19/2/2026** |
| **Section: 22S2** | **Date Submitted: 19/2/2026** |
| **Members:** Bulaong, Ross Andrew | **Instructor: Engr. Noel Lusung** |
| Florencio, David | |
| Malabanan, Nadine | |
| Que, Leroy Josef | |
| Zapanta, Russell | |

**1. Objective:**

This activity aims to implement addition and subtraction using logic circuits.

**2. Intended Learning Outcomes (ILOs):**

The students should be able to:
2.1. Design a combinational logic circuit that performs addition and subtraction.
2.2. Simulate and construct 3-bit full adder truth table.

**3. Discussion**

**Binary Addition Circuits**

Logic gates are used to accomplish the arithmetic operation of binary addition in digital circuits. A two-input logic gate is required to accomplish the addition of two binary numbers. The exclusive-OR gate is used to achieve binary addition which is slightly different from basic OR gate.

- **Half Adder**
  A logic circuit block used for adding two one-bit numbers or simply two bits is called as a half adder circuit. This circuit has two inputs which accept the two bits and two outputs, with one producing sum output and other produce carry output.
- **Full Adder**
  A binary full adder is a multiple output combinational logic network that performs the arithmetic sum of three input bits. As we have seen that the half adder cannot respond to the three inputs and hence the full adder is used to add three digits at a time.

**Binary Subtraction Circuits**

Subtraction is a mathematical operation in which one integer number is deducted from another to obtain the equivalent quantity. The number from which other number is to be deducted is called as minuend and the number subtracted from the minuend is called subtrahend. Similar to the binary addition, binary subtraction is also having four possible alternative operations.

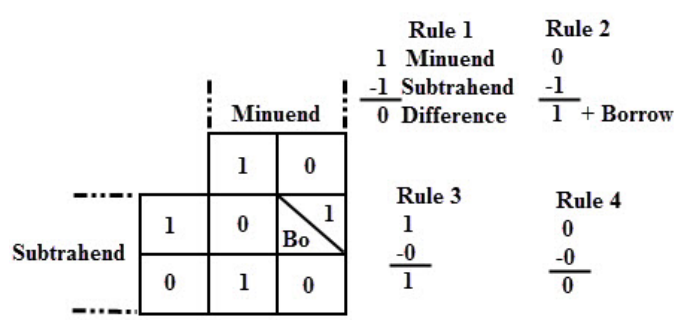


Figure 6.1. Elementary operations of the binary subtractions

- Half Subtractors

A half subtractor is a multiple output combinational logic network that does the subtraction of two bits of binary data. It has input variables and two output variables. Two inputs are corresponding to two input bits and two output variables corresponds to the difference bit and borrow bit.

- Full Subtractor

A combinational logic circuit performs a subtraction between the two binary bits by considering borrow of the lower significant stage is called as the full subtractor. In this, subtraction of the two digits is performed by taking into consideration whether a 1 has already borrowed by the previous adjacent lower minuend bit or not.

**4. Resources:**

**Materials:**

- Personal Computer
- Internet connection

  Simulation Tools:
  - TinkerCAD
  - Logicly

**5. Procedure:**

1. Construct and simulate the full adder in Logicly and TinkerCAD as shown in Figure 6.2.

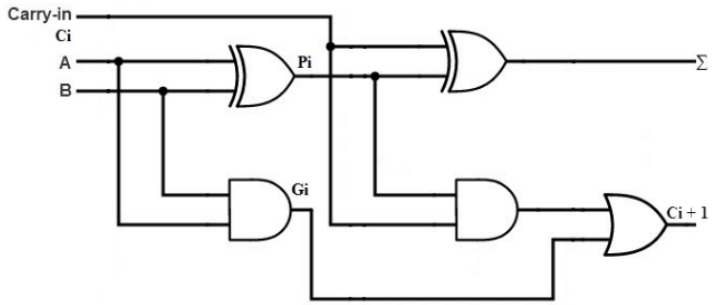


Figure 6.2 Full Adder

2. Apply the different combinations to the data switches and observe the corresponding output in every combination. Record the answers in Table 6.1.
3. Repeat step 1 and 2 for Figure 6.3 and record the answers in Table 6.2.

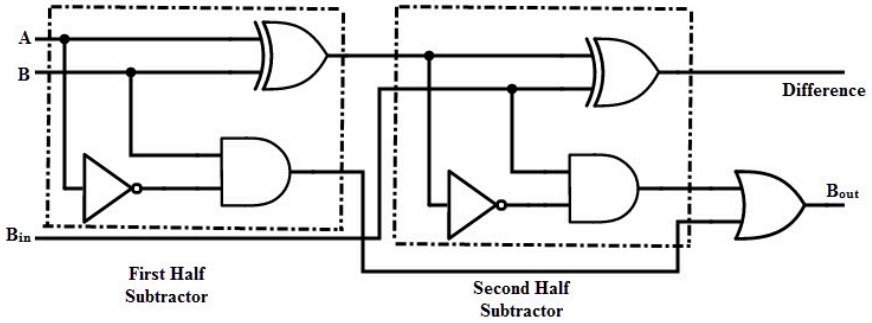

Figure 6.3 Full Subtractor

4. Research the circuit diagram for 3-bit full adder and simulate Logicly and TinkerCAD. Place the 3-bit full adder in the data and result in section 6 and have it as Figure 6.4.
5. Apply the different combinations to the data switches and observe the corresponding output in every combination. Record the answers in Table 6.3.

**6. Data and Results:**

1. Truth table for Full Adder

| INPUT | | | OUTPUT | |
|---|---|---|---|---|
| A | B | Cin | SUM | Cout |
| 0 | 0 | 0 | 0 | 0 |
| 0 | 0 | 1 | 1 | 0 |
| 0 | 1 | 0 | 1 | 0 |
| 0 | 1 | 1 | 0 | 1 |
| 1 | 0 | 0 | 1 | 0 |
| 1 | 0 | 1 | 0 | 1 |
| 1 | 1 | 0 | 0 | 1 |
| 1 | 1 | 1 | 1 | 1 |

Table 6.1 Full Adder Truth Table

2. Truth table for Full Subtractor

| INPUT | | | OUTPUT | |
|---|---|---|---|---|
| A | B | Bin | Difference | Bout |
| 0 | 0 | 0 | 0 | 0 |
| 0 | 0 | 1 | 1 | 1 |
| 0 | 1 | 0 | 1 | 1 |
| 0 | 1 | 1 | 0 | 1 |
| 1 | 0 | 0 | 1 | 0 |
| 1 | 0 | 1 | 0 | 0 |
| 1 | 1 | 0 | 0 | 0 |
| 1 | 1 | 1 | 1 | 1 |

Table 6.2 Full Subtractor Truth Table

3. Diagram for 3-bit full adder and 3-bit full subtractor

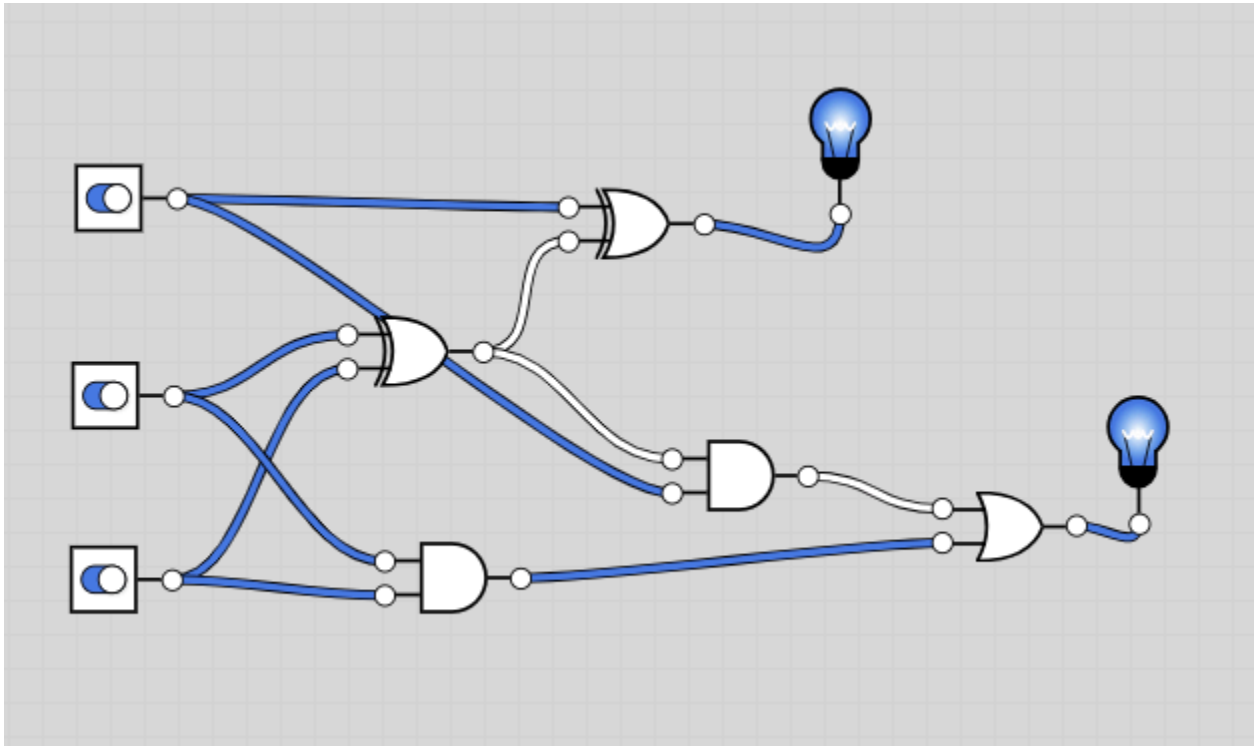

Logicly Full Adder

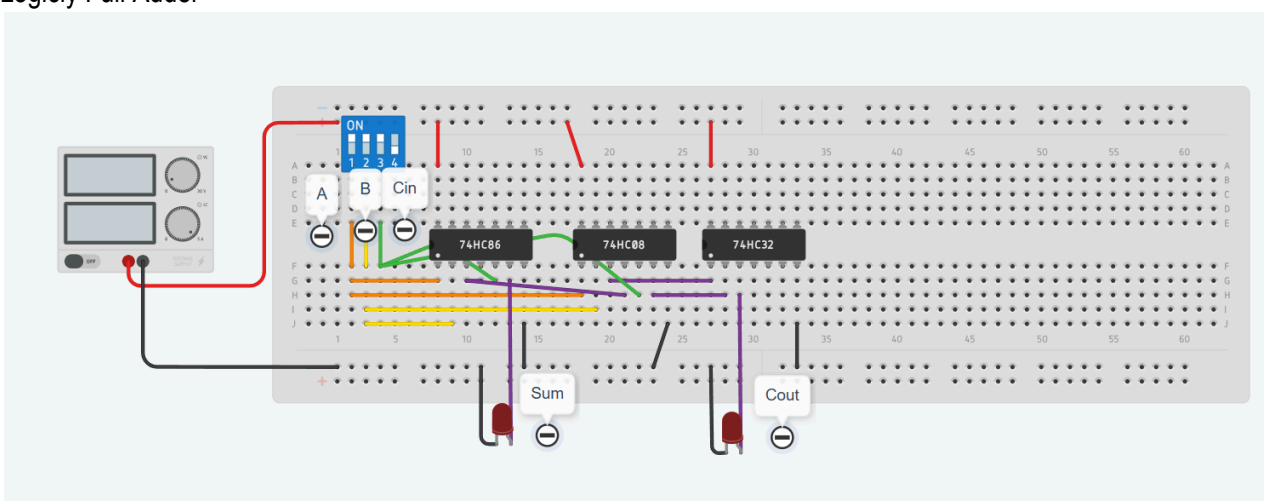


TinkerCAD Full Adder Circuit

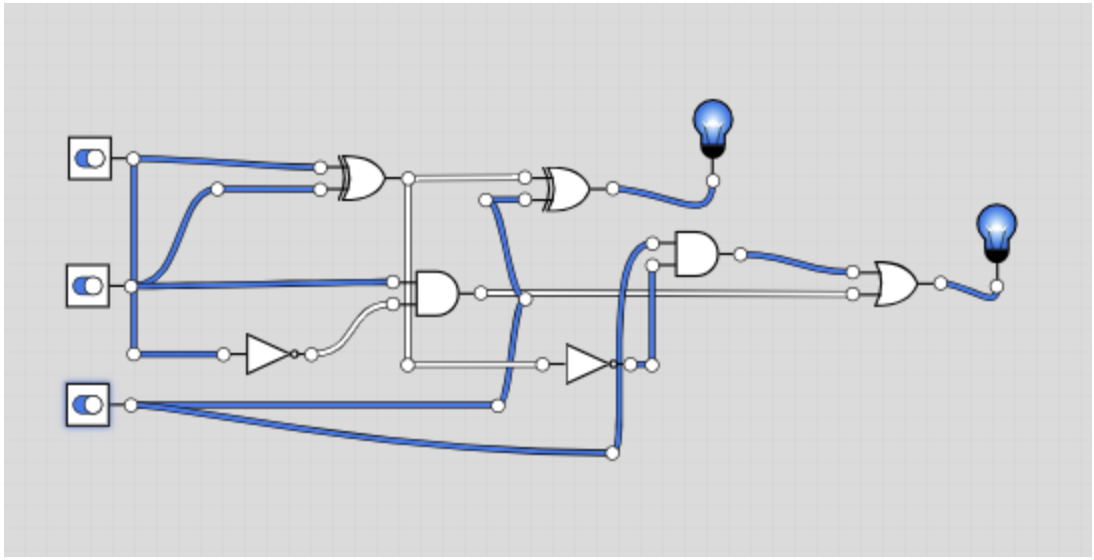

Logicly Full Subtractor

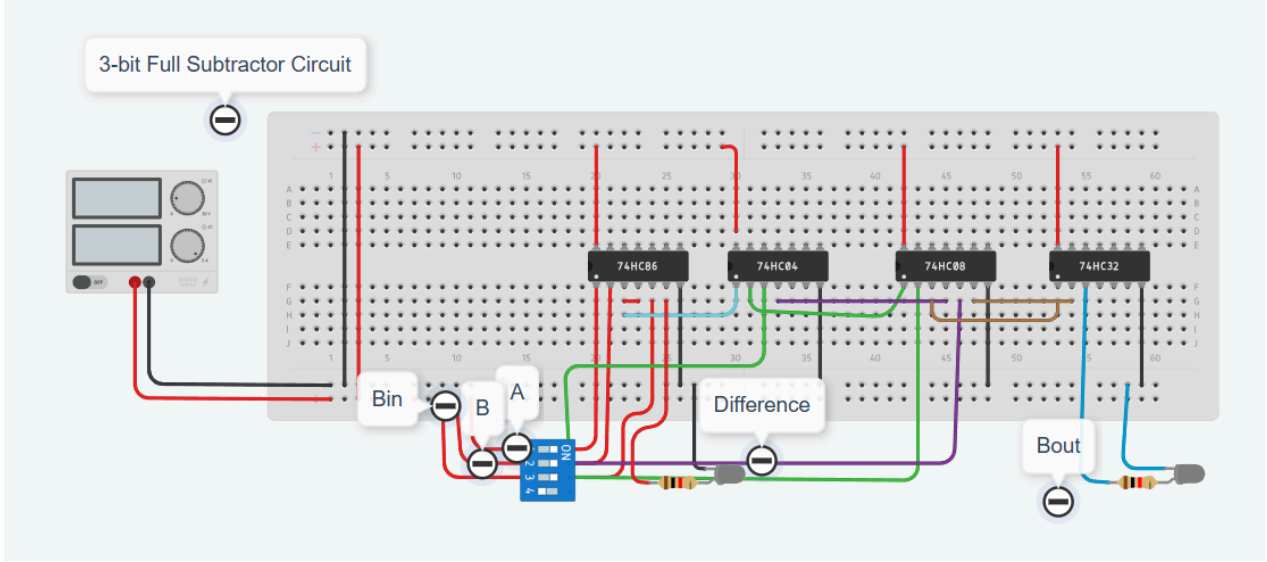


TinkerCAD Full Subtractor Circuit

**7. Final Output**

Screenshot or print screen of TinkerCAD application different output simulations (5 points deductions for only one output in every required circuit). Also, upload a video of the simulated circuit naming or talking about the shown input combinations. Failure to comply to each instruction will resulted to 5 points deductions. Please include the recorded simulation video in this section and write at least one sentence definition or label for each figure or image.

https://www.tinkercad.com/things/hQrqef3y7kP-adder-and-subtractor
https://drive.google.com/drive/folders/1K3JPuILx2yFx3J17TvR-S9XYkBRSkG0B?usp=drive_link

**8. Conclusion:**

Write a one paragraph (at least 10 sentences) Conclusion for this activity.

For our laboratory activity, we have learned the core concepts for full adder and full subtractor circuits. This is where we based it on their truth tables as for our main guide for understanding. At the start of the activity, we first finished filling up the truth tables using the binary adding and subtracting rules wherein rules like (1+1=10) and (0-1=1 with a borrow of 1) are integrated. By reminding us of those rules, we were able to fully complete and successfully did the truth tables. From the truth table, we were able to identify the sum,difference,carry, and borrow for every case. After that, we then recreated the full adder and full subtractor circuits in Tinkercad with our collaborative thinking. We also built the same designs also for our Logicly to verify that truth table whether our circuits are valid. With the logic gates being connected to the four outputs, we easily identify how each case is simulated . And for our last task, we checked every combination of our 2 circuit designs comparing it to the truth tables. Overall, this activity helped us understand how full adder and full subtractor as well as their half version when it comes to their function, structure, and outputs.

**9. Assessment (Rubric for Laboratory Performance):**

**Laboratory Performance Rubric (2)**

| Criteria | Ratings | | | Pts |
|---|---|---|---|---|
| Manipulative Skills | **3 pts**<br>**Proficient**<br>Student always demonstrate needed skills. | **2 pts**<br>**Acceptable**<br>Student occasionally demonstrate needed skills. | **1 pts**<br>**Beginner**<br>Student do not demonstrate needed skills. | 3 pts |
| Experimental Set - up | **3 pts**<br>**Proficient**<br>Student are able to set-up the material with minimum supervision. | **2 pts**<br>**Acceptable**<br>Student are able to set-up the materials with supervision. | **1 pts**<br>**Beginner**<br>Student are unable to set-up the materials. | 3 pts |
| Process Skills | **3 pts**<br>**Proficient**<br>Student always demonstrate targeted process skills. | **2 pts**<br>**Acceptable**<br>Student occasionally demonstrate targeted process skills. | **1 pts**<br>**Beginner**<br>Student do not demonstrate targeted process skills. | 3 pts |
| Application of Technical Writing Skills | **3 pts**<br>**Proficient**<br>Correct spelling, grammar, and sentence construction when writing the Discussion, Observation, and Conclusion are applied in the laboratory report. | **2 pts**<br>**Acceptable**<br>Some minor incorrect spelling, wrong grammar, and wrong sentence construction when writing the Discussion, Observation, and Conclusion are applied in the laboratory report. | **1 pts**<br>**Beginner**<br>Many incorrect spelling, wrong grammar, and wrong sentence construction when writing the Discussion, Observation, and Conclusion are applied in the laboratory report. | 3 pts |
| Time Management / Conduct of Experiment | **3 pts**<br>**Proficient**<br>Student finish ahead of time with complete data and time to revise data. | **2 pts**<br>**Acceptable**<br>Student finish on time with incomplete data. | **1 pts**<br>**Beginner**<br>Student do not finish on time with incomplete data. | 3 pts |
| Complete Requirements of Laboratory Report | **3 pts**<br>**Proficient**<br>Student submitted a complete requirements set by the teacher. | **2 pts**<br>**Acceptable**<br>Student submitted an almost complete Laboratory Report according to requirements set by the teacher. | **1 pts**<br>**Beginner**<br>Student submitted a lot of missing requirements in the Laboratory Report according to requirements set by the teacher. | 3 pts |
| Follow the Correct Format of Laboratory Report | **3 pts**<br>**Proficient**<br>Student submitted a correct format of Laboratory Report according to requirements set by the teacher. | **2 pts**<br>**Acceptable**<br>Student submitted an almost correct format of Laboratory Report according to requirements set by the teacher. | **1 pts**<br>**Beginner**<br>Student did not follow at all the format of Laboratory Report according to requirements set by the teacher. | 3 pts |
| Ability to do independent work | **3 pts**<br>**Proficient**<br>Student do not need to be supervised by the teacher. | **2 pts**<br>**Acceptable**<br>Student require occasional supervision by the teacher. | **1 pts**<br>**Beginner**<br>Student require supervision by the teacher. | 3 pts |
| | | | | Total Points: 24 |